SACE Board of SA | South Australian Certificate of Education

Government of South Australia

The external assessment requirements of this subject are listed on page 23.

Essential Mathematics
2017 Sample paper

Question Booklet

- Questions 1 to 9
- Answer ***all*** questions
- Write your answers in this question booklet
- You may write on page 9 if you need more space
- Allow approximately 40 minutes for each topic

DRAFT

GENERAL INFORMATION

Examination material
- one 23-page question booklet
- one SACE registration number label

Reading time
- 10 minutes
- You may make notes on scribbling paper

Writing time
- 2 hours
- Show all working in this question booklet
- Appropriate steps of logic and correct answers are required for full marks
- Use black or blue pen
- You may use a sharp dark pencil for graphs and diagrams

Total marks 90

Topic 2: Measurement
- Questions 1 to 3 (pp 2–8)
- 30 marks

Topic 4: Statistics
- Questions 4 to 6 (pp 10–15)
- 30 marks

Topic 5: Investments and Loans
- Questions 7 to 9 (pp 16–22)
- 30 marks

© SACE Board of South Australia 2016

Attach SACE registration number label to this box

Graphics calculator

1. Brand _____

Model _____

2. Brand _____

Model _____

For office use only

Supervisor check	Re-marked

QUESTION 1 (10 marks)

The dimensions (in millimetres) of a bedroom floor are shown in the diagram below:

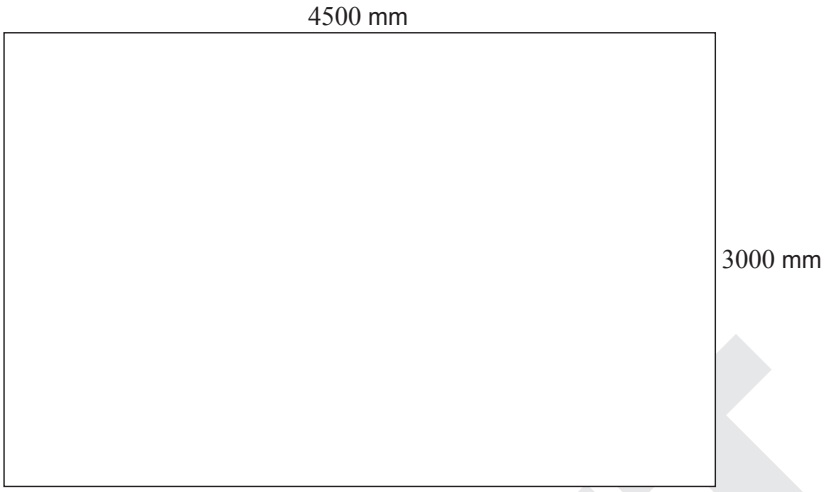

(a) Convert the dimensions of the bedroom floor to metres.

(1 mark)

(b) (i) Calculate the perimeter of the bedroom floor (in metres).

(1 mark)

(ii) Calculate the area of the bedroom floor (in square metres). Give your answer correct to two decimal places.

(2 marks)

DRAFT

(c) A timber trim is to be placed around the perimeter of the bedroom floor.

(i) Calculate the total cost of the timber trim if it is purchased in 1-metre lengths that cost $\$5.60$ each.

(1 mark)

(ii) Calculate the total cost of the timber trim if it is purchased in 1.8-metre lengths that cost $\$6.60$ each.

(2 marks)

(iii) State *one* limitation of purchasing timber trim in 1.8-metre lengths.

(1 mark)

(d) The bedroom floor is to be covered with tiles of size 250 millimetre $\times$ 250 millimetre.

Determine how many tiles will be needed to cover the area of the bedroom floor.

(2 marks)

DRAFT

QUESTION 2 (9 marks)

Golfer Amy is standing at point X and hits the ball towards the hole, which is 368 metres away. The wind pushes the ball off course by $25°$. The ball travels 225 metres and lands at Y as shown below:

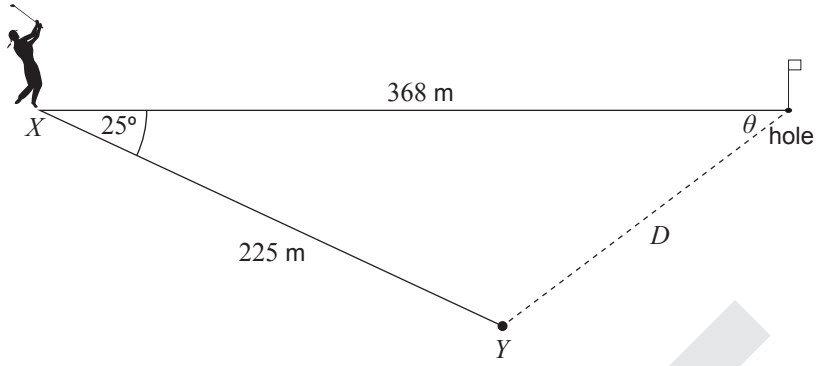

(a) Amy walks to point Y.

Using the cosine rule, show that the distance (D) Amy must now hit the ball to get it in the hole is approximately 190 metres.

(2 marks)

(b) Maria is standing by the hole and facing point X. She sees Amy hit her first shot.

Through what angle (θ) does Maria turn in order to face point Y and see the ball land?

(3 marks)

DRAFT

(c) Amy hits the ball into the hole with her second shot.

(i) Calculate how much further (in metres) the ball travelled from point X to the hole because it was pushed off course by the wind.

(2 marks)

(ii) Explain *one* assumption made when calculating your answer to part (c)(i).

(2 marks)

DRAFT

QUESTION 3 (11 marks)

The following diagram shows the width of an irregular-shaped pond at equal intervals of 0.9 metres along its length:

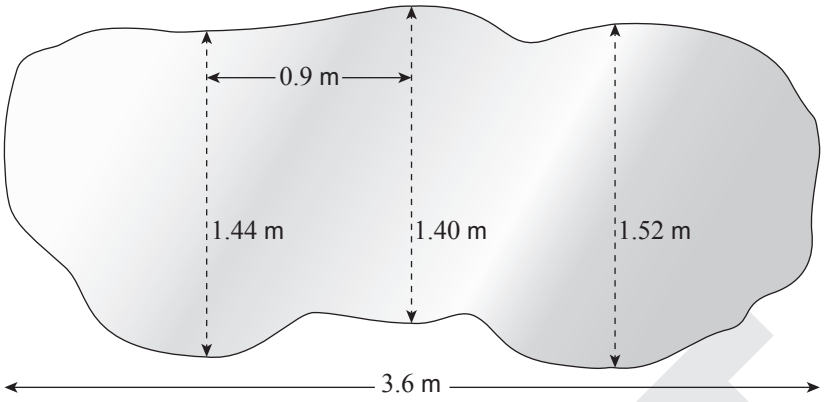

(a) (i) Using Simpson's rule, show that the area of the pond is approximately 4.4 square metres.

(3 marks)

(ii) How could you obtain a more accurate estimate of the area of the pond?

(1 mark)

DRAFT

(b) A fence has been placed around the outside of the pond as shown in the diagram below. The ground between the fence and the pond is covered with grass.

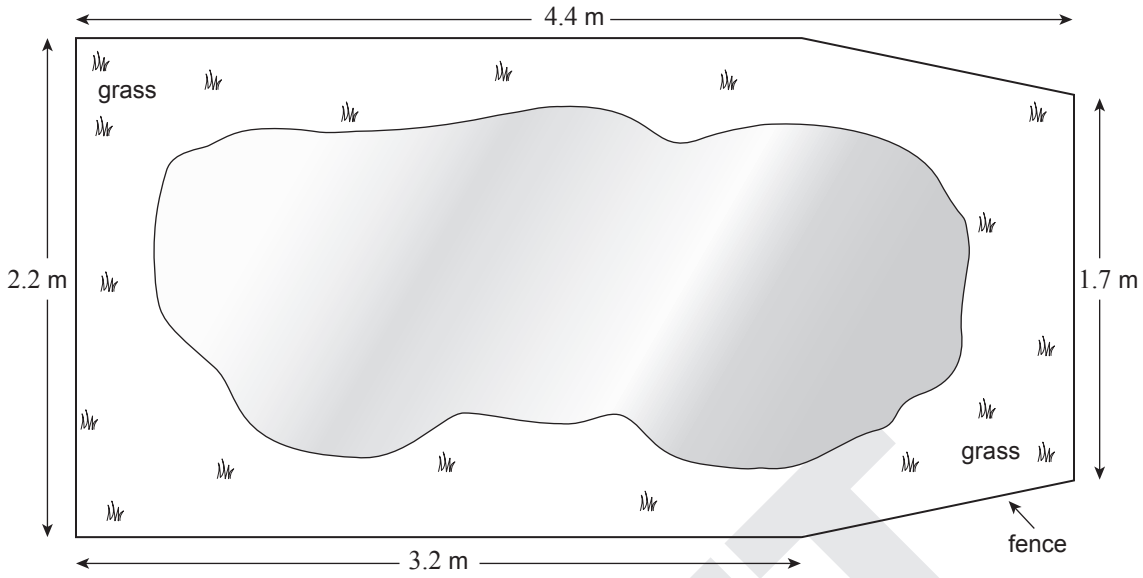

(i) Determine the total area of the space enclosed by the fence.

(3 marks)

(ii) Hence determine the area covered with grass.

(1 mark)

DRAFT

(c) There are fish in the pond, and to keep them healthy the pond needs to contain both water lilies and submerged plants.

The pond *already* contains 3000 square centimetres of water lilies, which provide food and shade for the fish.

The pond *also* needs to contain a number of submerged plants to provide oxygen to the fish.

The following formula is used to determine how many submerged plants are required:

$$\text{Number of submerged plants} = \text{surface area of pond } (\text{m}^2) - \text{surface area of water lilies } (\text{m}^2) \times 3$$

Determine how many submerged plants will be needed.

(3 marks)

DRAFT

You may write on this page if you need more space to finish your answer to any question. Make sure to label each answer carefully (e.g. 'Question 3(a)(i) continued').

DRAFT

QUESTION 4 (8 marks)

New Field High School has 1460 students. The Student Council is interested in finding out how many hours its students sleep each night.

The Student Council decides to survey 150 students from the school.

(a) Suggest *one* reason why the Student Council has chosen not to survey all the students in the school.

(1 mark)

(b) To collect the sample, the Student Council considers surveying students who are in the library during lunchtime on one particular day.

Explain *one* limitation of the method being considered by the Student Council.

(2 marks)

DRAFT

(c) The number of students in each year level at New Field High School is displayed in the table below:

Year level	*Number of students*
8	290
9	290
10	210
11	360
12	310
Total	1460

(i) What percentage of the students are Year 10 students? Give your answer correct to one decimal place.

(1 mark)

(ii) Calculate how many Year 10 students should be surveyed if the Student Council chooses to use a stratified sampling method.

(2 marks)

(d) Explain *one* sampling method — other than a stratified sampling method — that the Student Council could use for its survey.

(2 marks)

DRAFT

QUESTION 5 (11 marks)

A fisheries inspector measures the length of prawns at two restaurants: Prawn Palace and Best Fresh Fish. The following lengths (in centimetres) of prawns were measured at Best Fresh Fish.

17 25 15 23 25 15 17 13 25 14 13 20 24 26 16

(a) Find the range of the lengths of prawns that were measured at Best Fresh Fish.

(1 mark)

(b) For the prawns measured at Best Fresh Fish, find values for the minimum, Q_1, the median, Q_3, and the maximum.

(2 marks)

DRAFT

(c) Using the axis below, draw a box-and-whisker diagram for the data collected from Best Fresh Fish.

Length of prawns

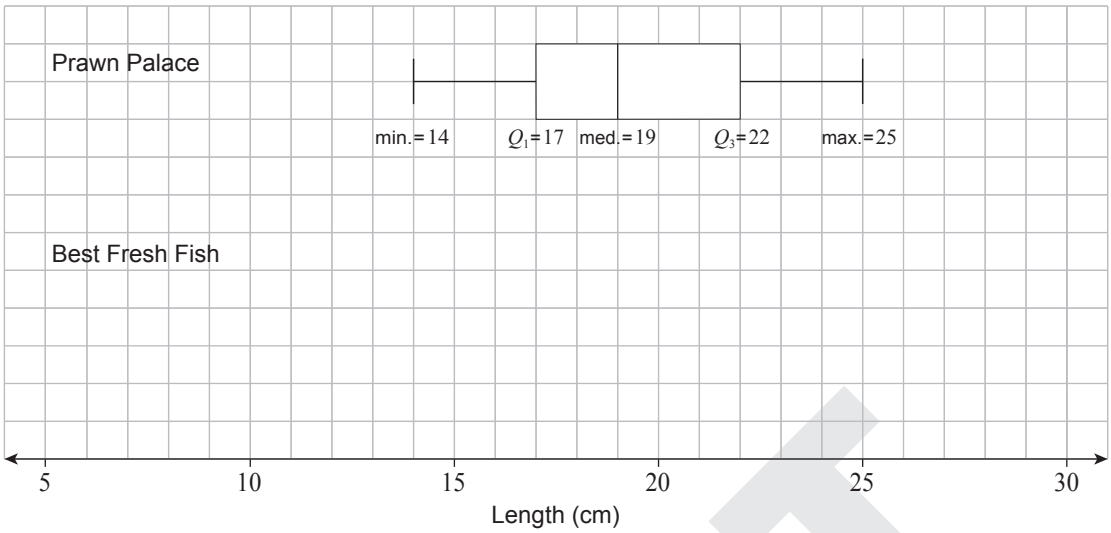

(3 marks)

(d) Using the box-and-whisker diagrams in part (c), complete the following sentences:

(i) The shortest prawn measured by the inspector was _____ centimetres long. (1 mark)

(ii) Half of the prawns at Prawn Palace were less than _____ centimetres long. (1 mark)

(iii) _____% of the prawns at Prawn Palace were between 17 centimetres and 25 centimetres long. (1 mark)

(e) Which restaurant do you think uses the longest prawns? Justify your answer.

(2 marks)

DRAFT

QUESTION 6 (11 marks)

A school canteen records its income from ice cream sales and the maximum temperature each day. The data for the past 10 days are shown in the following table.

Day	1	2	3	4	5	6	7	8	9	10
Maximum temperature (T°C)	24.2	26.4	21.9	25.2	32.1	29.4	35.1	33.4	30	27.2
Income ($\$S$)	215	325	185	332	522	412	614	544	445	408

A scatter plot of the data for Day 2 to Day 10 is given below.

Income from ice cream sales v maximum temperature

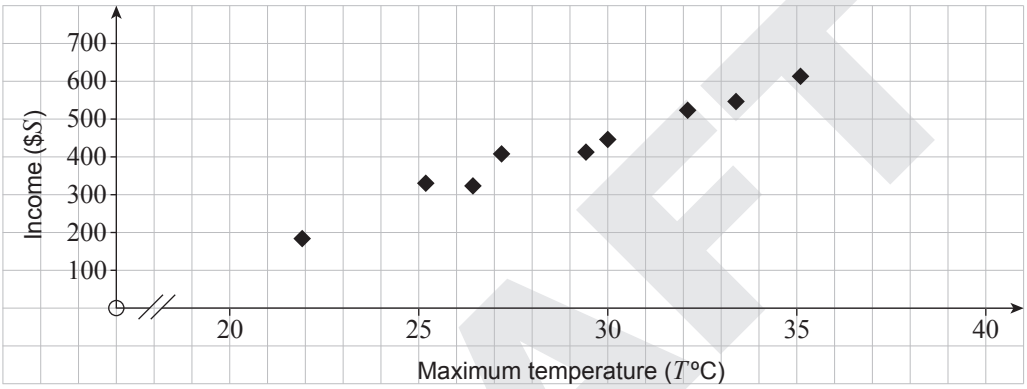

(a) Plot the data for Day 1 on the scatter plot above. (1 mark)

(b) Complete the following statement:

As the maximum temperature increases, the income from ice cream sales _____. (1 mark)

(c) Calculate the coefficient of determination (r^2), and comment on the strength of the relationship between the variables.

(2 marks)

DRAFT

(d) Write down the equation of the least squares regression line (line of best fit).

(2 marks)

(e) (i) Using the equation that you found in part (d), calculate the expected income from ice cream sales on a day when the maximum temperature is 38ºC.

(1 mark)

(ii) Is it reasonable to use the least squares regression line (line of best fit) to calculate your answer to part (e)(i)? Justify your answer.

(2 marks)

(f) What maximum temperature would you expect if the income from ice cream sales on a day is $\$370$?

(2 marks)

DRAFT

QUESTION 7 (9 marks)

Jamie researched the following two options for investing $\$7600$ for 2 years:

- Option A is an investment account with a *flat* interest rate of 5.5% per annum.
- Option B is a savings account with an interest rate of 5.25% per annum, compounded monthly.

(a) Calculate the total interest Jamie would earn over the 2 years if he chooses Option A.

(2 marks)

(b) Calculate the total interest Jamie would earn over the 2 years if he chooses Option B.

(3 marks)

DRAFT

(c) Explain which option you think Jamie should choose: Option A or Option B.

(2 marks)

(d) Calculate Jamie's after-tax return if he chooses Option A and his marginal tax rate is 32.5c for each dollar of interest earned.

(2 marks)

DRAFT

QUESTION 8 (8 marks)

Melissa and Paul are buying a car for \$44 000. The bank lends them 90% of the purchase price, which they have to repay over 9 years at an interest rate of 9.5% per annum, compounded monthly.

(a) How much money are Melissa and Paul borrowing?

(1 mark)

(b) Show that the minimum monthly repayment on this loan is approximately \$550.

(2 marks)

DRAFT

(c) Melissa and Paul decide to repay more than the minimum monthly repayment.

(i) How long (in years) will it take Melissa and Paul to repay their loan if they make repayments of \$800 per month?

(3 marks)

(ii) How much time (in years) would Melissa and Paul save by making repayments of \$800 per month instead of \$550 per month?

(1 mark)

(d) State *one* way — other than increasing their monthly repayment — that Melissa and Paul could pay off their loan sooner.

(1 mark)

DRAFT

QUESTION 9 (13 marks)

Suresh wants to save $\$100\,000$ for a deposit for a house.

(a) Consider the following accounts:

- Account A: Comparison rate of 3.2% per annum
- Account B: Comparison rate of 2.8% per annum
- Account C: Comparison rate of 3.25% per annum.

(i) Which one of these accounts do you think Suresh should choose? Justify your answer.

(2 marks)

(ii) Suggest *one* reason why Suresh might *not* choose the account you recommended in your answer to part (a)(i).

(1 mark)

(b) (i) Suresh considers an account with an interest rate of 3.2% per annum, compounded fortnightly.

How much would Suresh need to deposit into this account each fortnight to save $\$100\,000$ in 5 years?

(2 marks)

DRAFT

(ii) Suresh decides to look for an account that offers a higher interest rate. He plans to deposit \$680 into this account each fortnight.

What interest rate does this account need to offer in order for Suresh to save \$100 000 in exactly 5 years?

(2 marks)

(c) Suresh selects an account with an interest rate of 4% per annum, compounded fortnightly, and he deposits \$680 into this account each fortnight.

(i) Calculate the balance of his account after 3 years.

(2 marks)

(ii) Calculate how much interest he will earn over the 3 years.

(2 marks)

DRAFT

(d) State *two* factors that might prevent Suresh from reaching his $\$100\,000$ savings goal in 5 years.

(2 marks)

2017 SAMPLE ESSENTIAL MATHEMATICS PAPER

The purpose of this sample paper is to show the structure of the Essential Mathematics examination and the style of questions that may be used. The following extract is from the 2017 subject outline for Essential Mathematics:

EXTERNAL ASSESSMENT

Assessment Type 3: Examination (30%)

Students undertake a 2-hour external examination in which they answer questions on the following three topics:

- Topic 2: Measurement
- Topic 4: Statistics
- Topic 5: Investments and Loans.

The examination is based on the key questions and key concepts in topics 2, 4, and 5. The considerations for developing teaching and learning strategies are provided as a guide only, although applications described under this heading may provide contexts for examination questions.

The examination consists of a range of problems, some focusing on knowledge, routine skills, and applications, and others focusing on analysis and interpretation. Students provide explanations and arguments, and use correct mathematical notation, terminology, and representation throughout the examination.

Students may take one unfolded A4 sheet (two sides) of handwritten notes into the examination room.

Students may use approved electronic technology during the external examination. However, students need to be discerning in their use of electronic technology to find solutions to questions/problems in examinations.

The following graphics calculators are approved for 2017:
Casio fx-9860G AU
Casio fx-9860G AU Plus
Casio fx-CG20 AU
Hewlett Packard HP 39GS
Sharp EL-9900
Texas Instruments TI-83 Plus
Texas Instruments TI-84 Plus
Texas Instruments — TI 84 Plus C — silver edition
Texas Instruments — TI 84 Plus CE

Students may bring two graphics calculators or one scientific calculator and one graphics calculator into the examination room.

There is no list of Board-approved scientific calculators. Any scientific calculator, except those with an external memory source, may be used.

For this assessment type, students provide evidence of their learning in relation to the following assessment design criteria:

- concepts and techniques
- reasoning and communication.

Source: *Essential Mathematics 2017 Draft Subject Outline Stage 2*, pp 39–40, on the SACE website, www.sace.sa.edu.au

This sample Essential Mathematics paper shows the format of the examination for 2017.